FERRONI TRASMISSION S.r.l.

Manufactures - Gearboxes

Via Prato Bovino, 86 Cogruzzo
42024 CASTELNOVO SOTTO (RE) ITALY

Tel. 0522/685339 http://www.ferronitransmission.it
Fax 0522/685298 e-mail: info@ferronitransmission.it

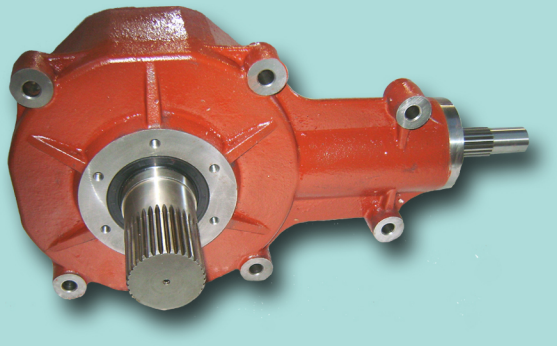

FT55700212

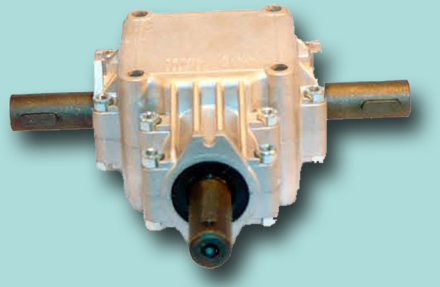

RV 010 - HP 15

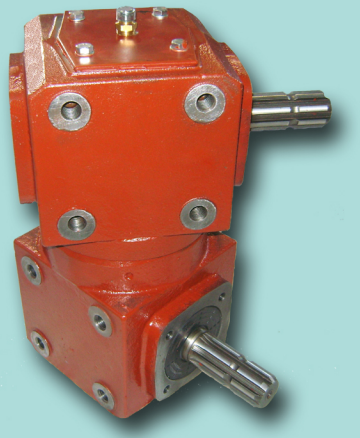

FT4411-02

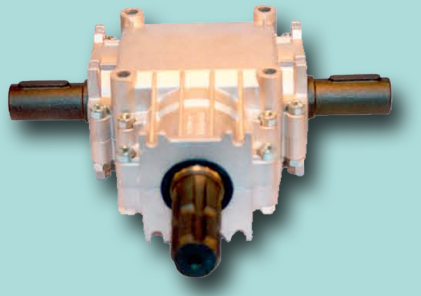

RV 022 - HP 25

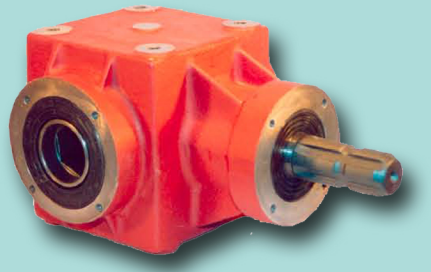

RV S 08 - HP 35

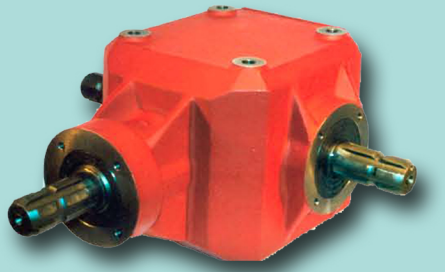

RV 150 - HP 150

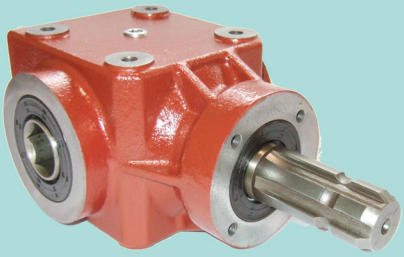

RR 00255 - HP 19
RATIO 1.46:1

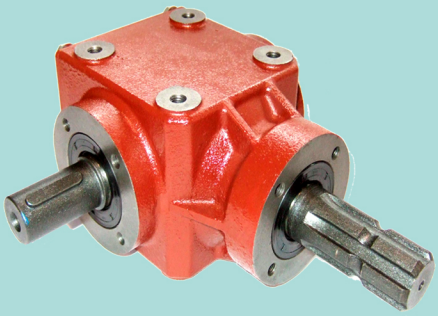

RR 00255
RATIO 1:1 - HP 30
RATIO 1:277 - HP 12

MANUFACTURES GEARBOXES & PTO CARDAN SHAFT

Manuale di istruzioni ALBERI CARDANI ECOPERTURE DI SICUREZZA PER ALBERI CARDANI

DICHIARAZIONE DI INCORPORAZIONE

CE

Declaration of conformity

Il sottoscritto Ferroni Bruno
In qualità di legale rappresentante della ditta Ferroni Trasmission s.r.l.
con sede in Via Prato Bovino, 86 42024 CASTELNOVO SOTTO (RE) ITALY
P.IVA 01770550356

Dichiara

Che il sottoscritto è la persona incaricata alla costituzione della documentazione tecnica che i dispositivi di trasmissione : **Alberi cardani e relative coperture di sicurezza.**
cod: (**10HP, 20HP, 30HP, 40HP, 50HP, 60HP, 70HP, 80HP, 90HP, 100HP**)
sono costruiti nel rispetto del paragrafo VII B della direttiva 2006/42 CE
Possono essere incorporati tra le motrici e le macchine che necessitano di fornitura di potenza.
Si impegna a trasmettere, in risposta a una richiesta adeguatamente motivata delle autorità nazionali, informazioni pertinenti sui dispositivi. L'impegno comprende le modalità di trasmissione e lascia impregiudicati i diritti di proprietà intellettuale del fabbricante dei dispositivi

Dichiara

che il dispositivo non deve essere messo in servizio finché la macchine tra cui deve essere incorporata non sono state dichiarate conformi, se del caso, alle disposizioni della presente o altre direttive e/o leggi.

Dichiara inoltre

che il dispositivo costruito in conformità alle disposizioni delle seguenti direttive e norme:

- Direttiva **2006/42 CE** nota come Direttiva macchine
- Norma **UNI EN ISO 12100-1:2010** Principi generali di progettazione
- Norma **UNI EN ISO 12100-2:2010** Principi generali di progettazione
- Norma **EN 12965: 2003 +A2:2009**
- Norma **EN ISO 5674:2009**
- Norma **ISO 5673-1 2005**

Anno di costruzione: 2014 numero di matricola: vedi etichetta sul prodotto

Organismo Notificato: Ente Certificazione Macchine **Notified Body N.1282**
Certificate Nr. T120627/HJD742
Via Mincio, 386 Loc. Formica, 41056 Savignano sul Panaro (MO)
Ed è quindi conforme alle normative vigenti.

Firma
Bruno Ferroni

L'analisi dei rischi il manuale e la documentazione che costituisce il fascicolo tecnico è stata verificata dall'ing. Renato Carraro

C & **C** s.a.s. Via Lauro, 95 Cadoneghe Padova Italy
Consulenti e Periti per : **Guardia di Finanza, Tributaria, Autorità Doganali, Carabinieri Polizia di Stato, Unioncamere, Tribunali**

Dimensione = T10 - Size = T10

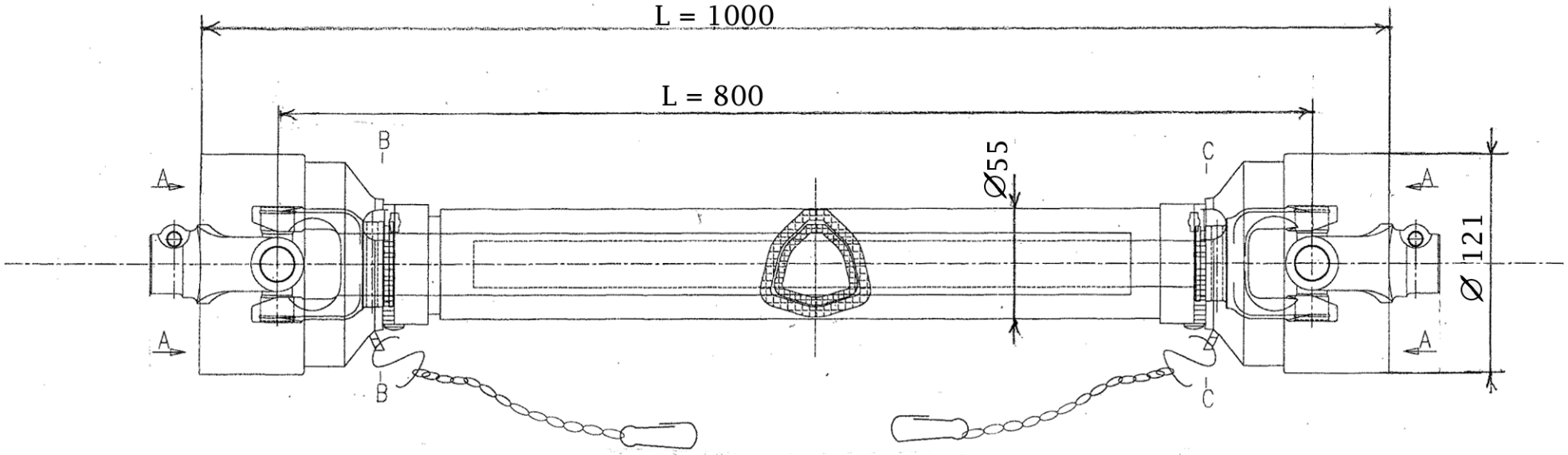

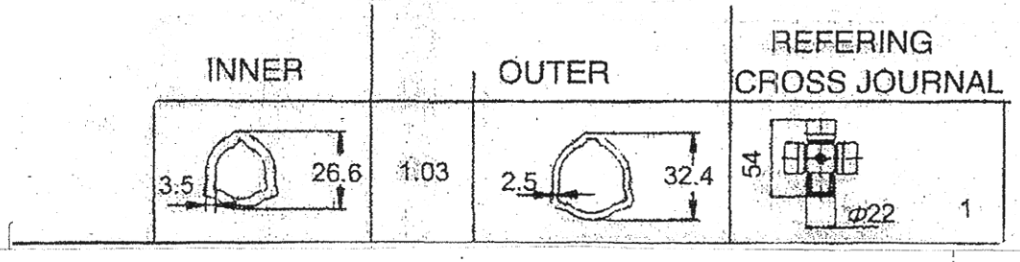

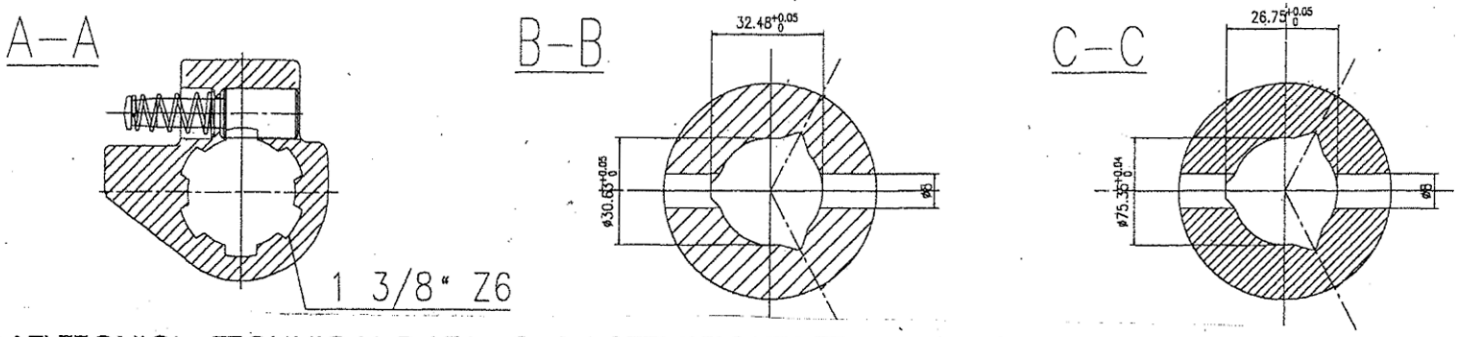

DATI TECNICI - *TECHNICAL DATA* - CARACTERISTIQUES TECHNIQUES

540 giri/min - rpm - tr/min				**1000** giri/min - rpm - tr/min			
POTENZA - *POWER* - PUISSANCE		COPPIA - *TORQUE* - COUPLE		POTENZA - *POWER* - PUISSANCE		COPPIA - *TORQUE* - COUPLE	
KW	**CV-HP-PS**	**N•m**	**in•lb**	**KW**	**CV-HP-PS**	**N•m**	**in•lb**
12	16	210	1850	18	25	172	1500

Valori per angoli di snodo 5° durata 1000 ore. *Values related to 5° joint angles, 1000 hours life*

Dimensione T=20 - Size T=20

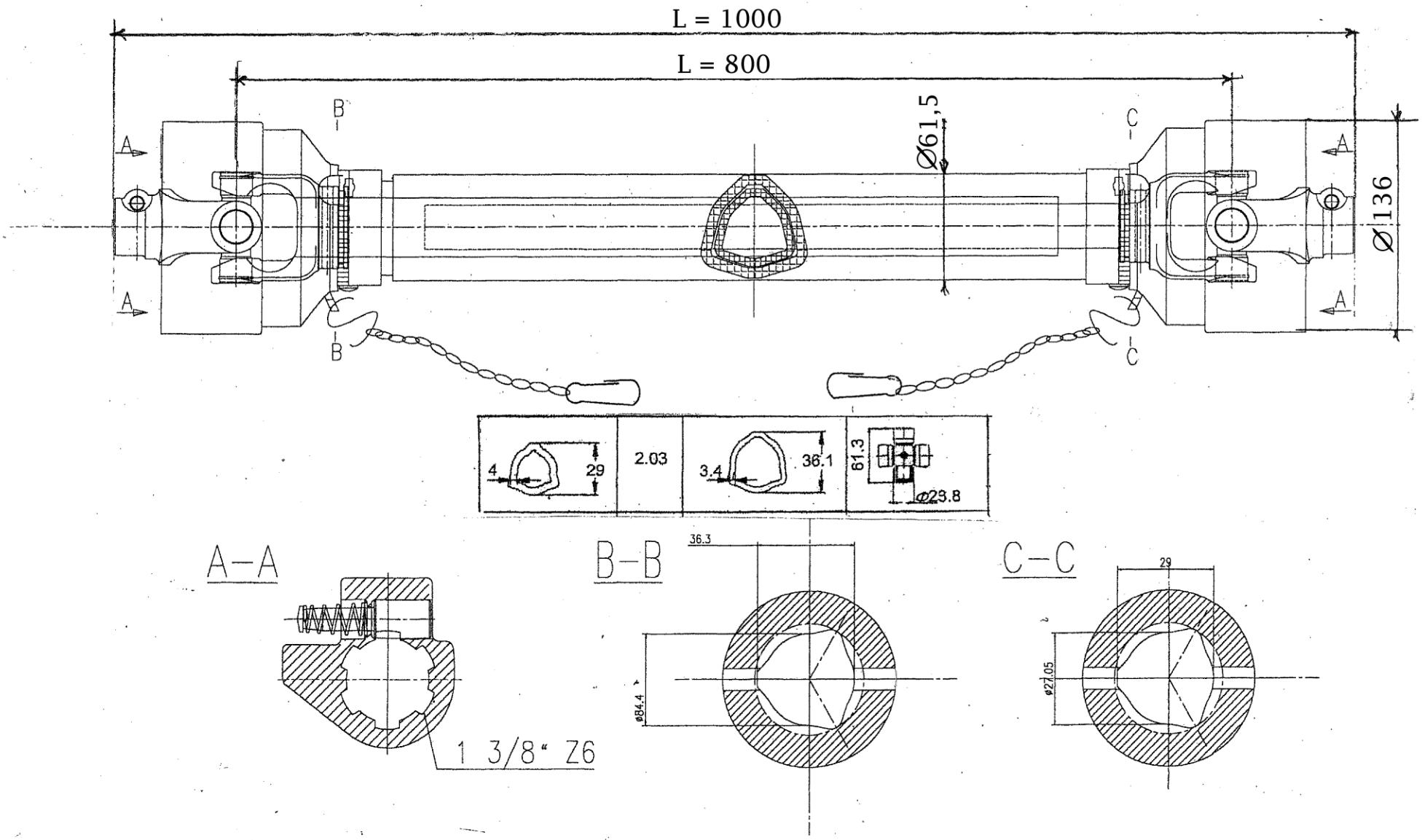

DATI TECNICI - *TECHNICAL DATA* - CARACTERISTIQUES TECHNIQUES

540 giri/min - rpm - tr/min				**1000** giri/min - rpm - tr/min			
POTENZA - *POWER* - PUISSANCE		COPPIA - *TORQUE* - COUPLE		POTENZA - *POWER* - PUISSANCE		COPPIA - *TORQUE* - COUPLE	
KW	**CV-HP-PS**	**N•m**	**in•lb**	**KW**	**CV-HP-PS**	**N•m**	**in•lb**
15	21	270	2400	23	31	220	1950

Valori per angoli di snodo 5° durata 1000 ore.

Values related to 5° joint angles, 1000 hours life

Dimensione T=30 - Size T30

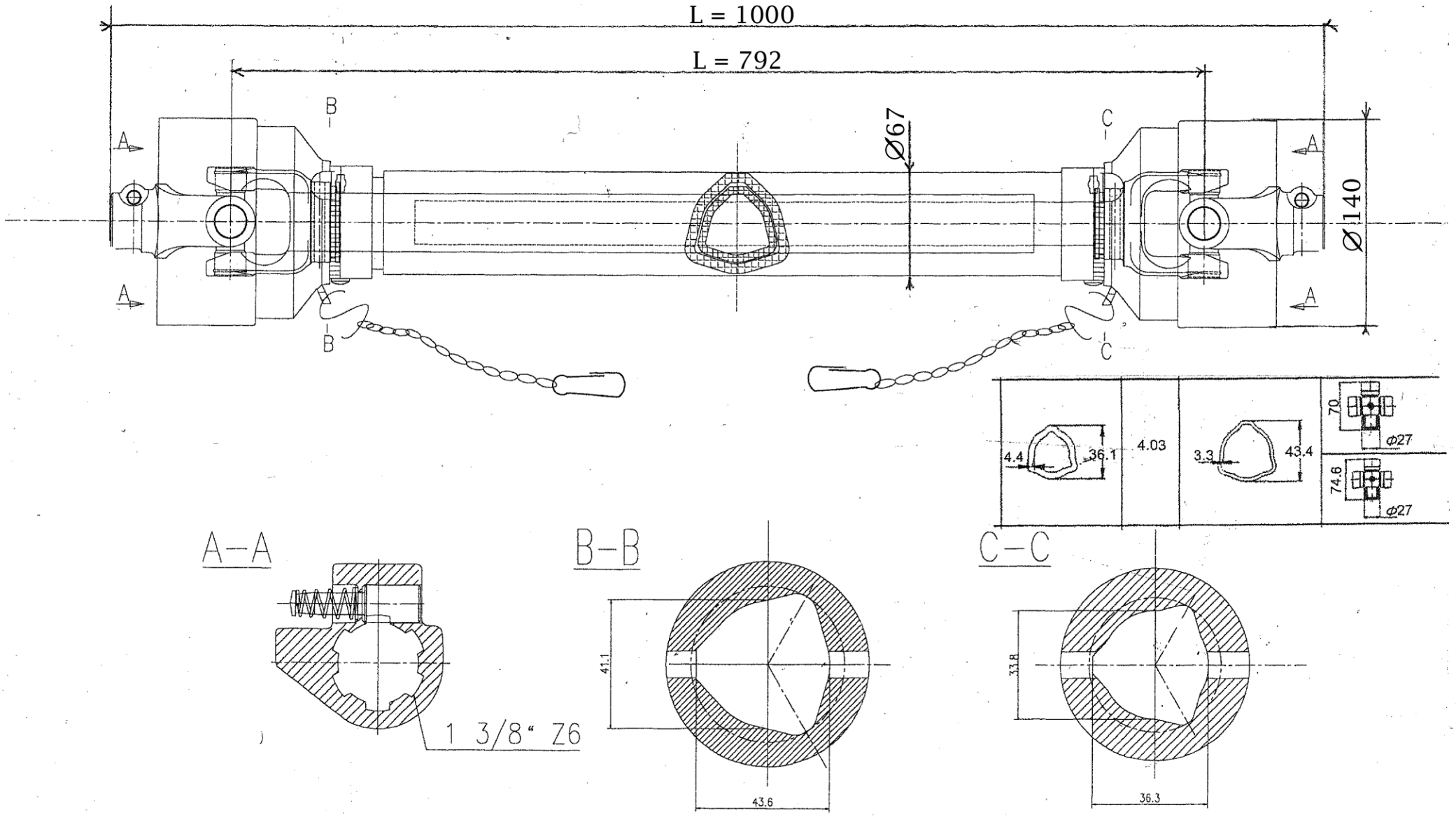

DATI TECNICI - *TECHNICAL DATA* - CARACTERISTIQUES TECHNIQUES

540 giri/min - rpm - tr/min				**1000** giri/min - rpm - tr/min			
POTENZA - *POWER* - PUISSANCE		COPPIA - *TORQUE* - COUPLE		POTENZA - *POWER* - PUISSANCE		COPPIA - *TORQUE* - COUPLE	
KW	**CV-HP-PS**	**N•m**	**in•lb**	**KW**	**CV-HP-PS**	**N•m**	**in•lb**
22	30	390	3450	35	47	330	2900

Valori per angoli di snodo 5° durata 1000 ore.

Values related to 5° joint angles, 1000 hours life

Dimensione T40 - Size T40

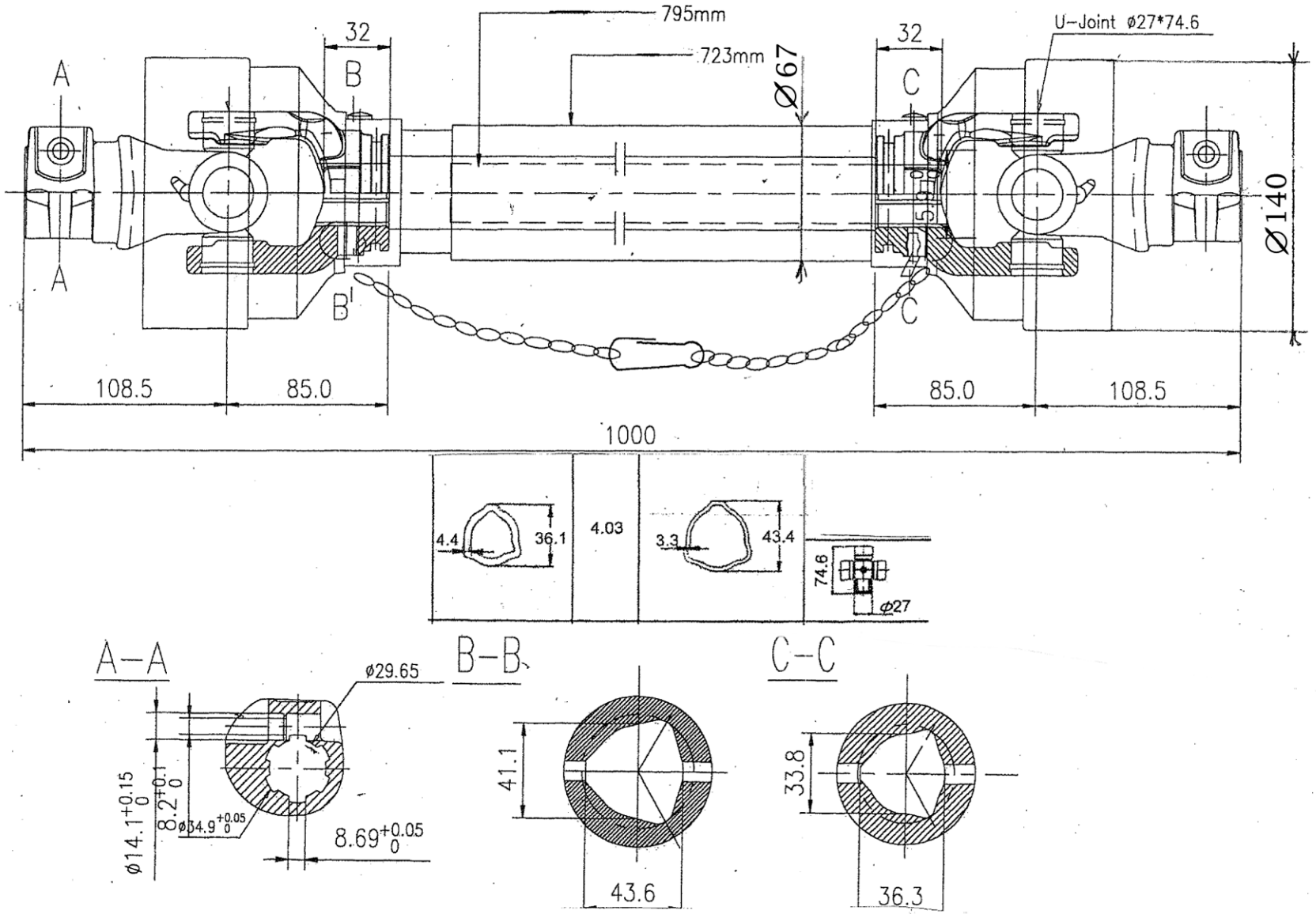

DATI TECNICI - *TECHNICAL DATA* - CARACTERISTIQUES TECHNIQUES

540 giri/min - rpm - tr/min				**1000** giri/min - rpm - tr/min			
POTENZA - *POWER* - PUISSANCE		COPPIA - *TORQUE* - COUPLE		POTENZA - *POWER* - PUISSANCE		COPPIA - *TORQUE* - COUPLE	
KW	**CV-HP-PS**	**N•m**	**in•lb**	**KW**	**CV-HP-PS**	**N•m**	**in•lb**
26	35	460	4050	40	55	380	3350

Valori per angoli di snodo 5° durata 1000 ore.

Values related to 5° joint angles, 1000 hours life

Dimensione T50 - Size T50

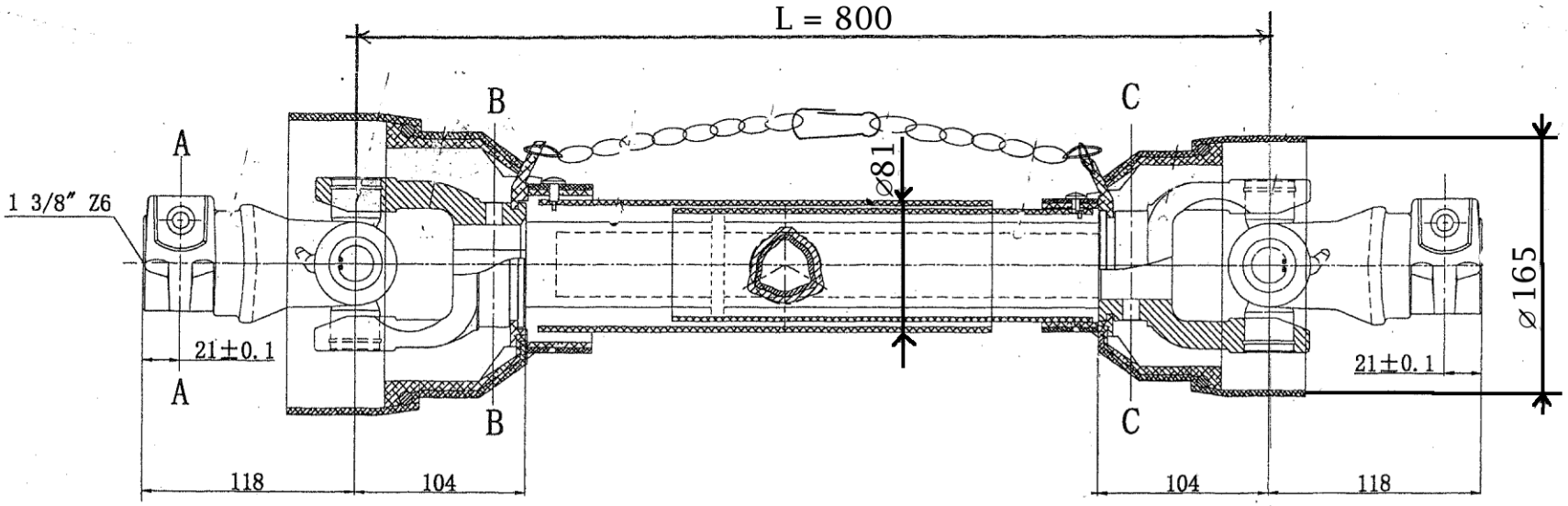

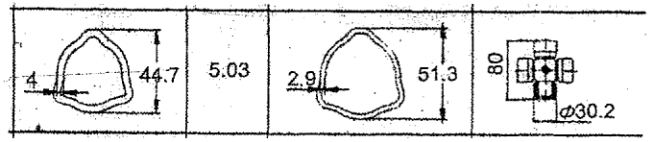

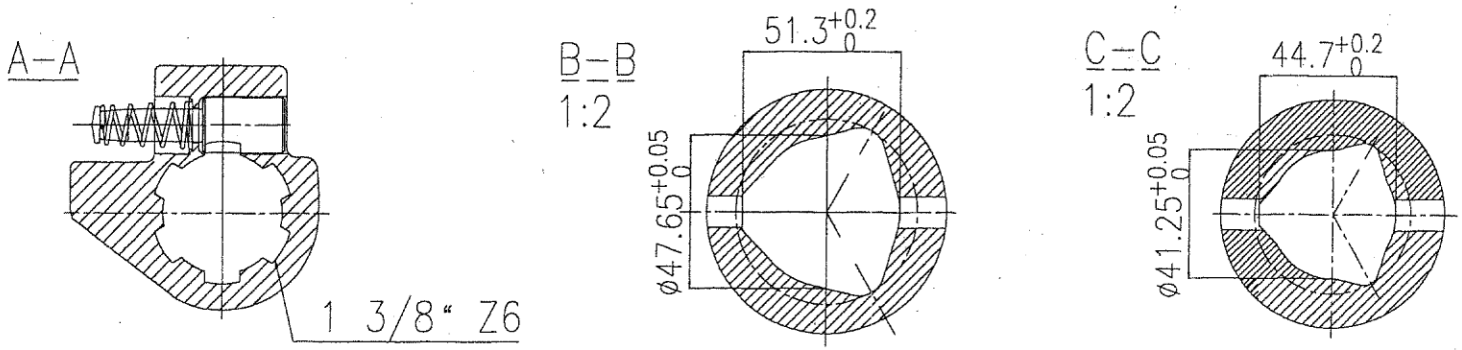

DATI TECNICI - *TECHNICAL DATA* - CARACTERISTIQUES TECHNIQUES

540 giri/min - rpm - tr/min				**1000** giri/min - rpm - tr/min			
POTENZA - *POWER* - PUISSANCE		COPPIA - *TORQUE* - COUPLE		POTENZA - *POWER* - PUISSANCE		COPPIA - *TORQUE* - COUPLE	
KW	**CV-HP-PS**	**N•m**	**in•lb**	**KW**	**CV-HP-PS**	**N•m**	**in•lb**
37	50	650	5755	58	78	547	4815

Valori per angoli di snodo 5° durata 1000 ore. *Values related to 5° joint angles, 1000 hours life*

Dimensione T60 - Size T60

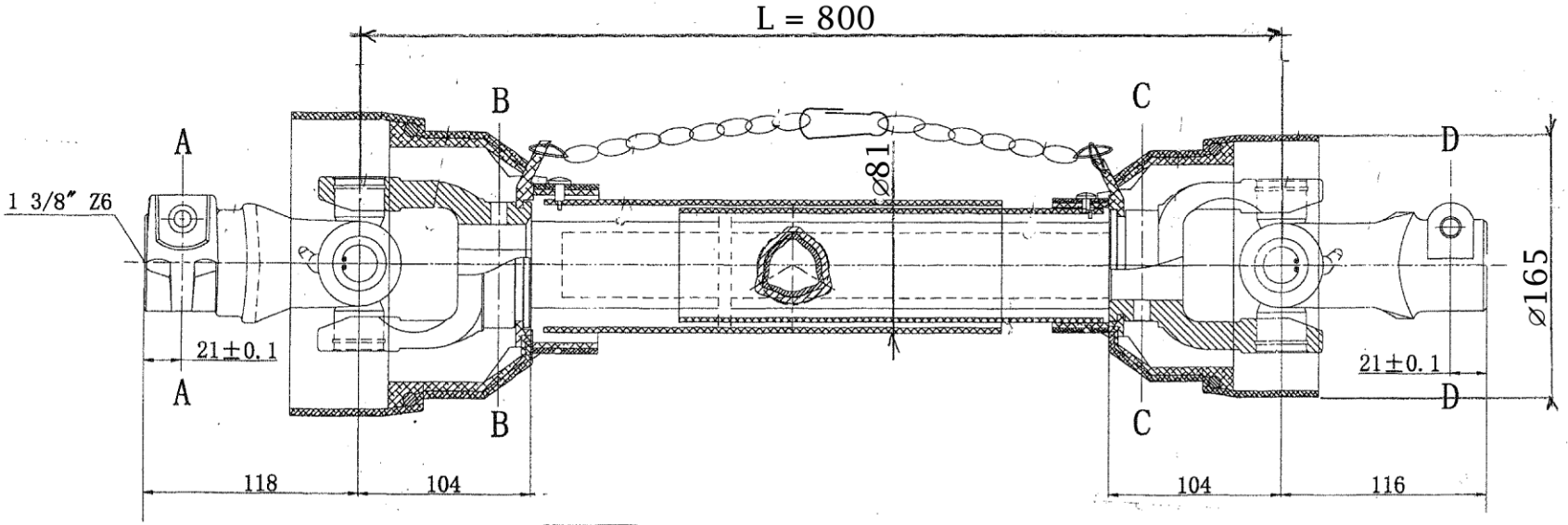

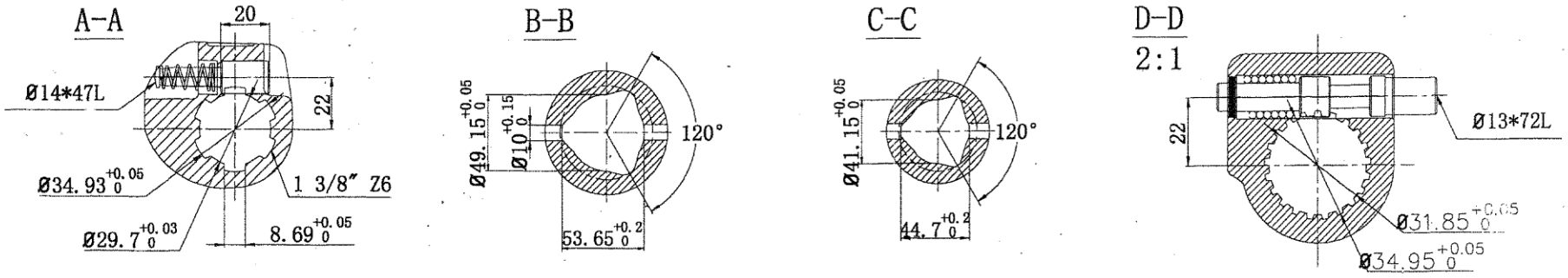

DATI TECNICI - *TECHNICAL DATA* - CARACTERISTIQUES TECHNIQUES

540 giri/min - rpm - tr/min				**1000** giri/min - rpm - tr/min			
POTENZA - *POWER* - PUISSANCE		COPPIA - *TORQUE* - COUPLE		POTENZA - *POWER* - PUISSANCE		COPPIA - *TORQUE* - COUPLE	
KW	**CV-HP-PS**	**N•m**	**in•lb**	**KW**	**CV-HP-PS**	**N•m**	**in•lb**
47	64	830	7350	74	100	710	6250

Valori per angoli di snodo 5° durata 1000 ore.

Values related to 5° joint angles, 1000 hours life

Dimensione T70 - Size T70

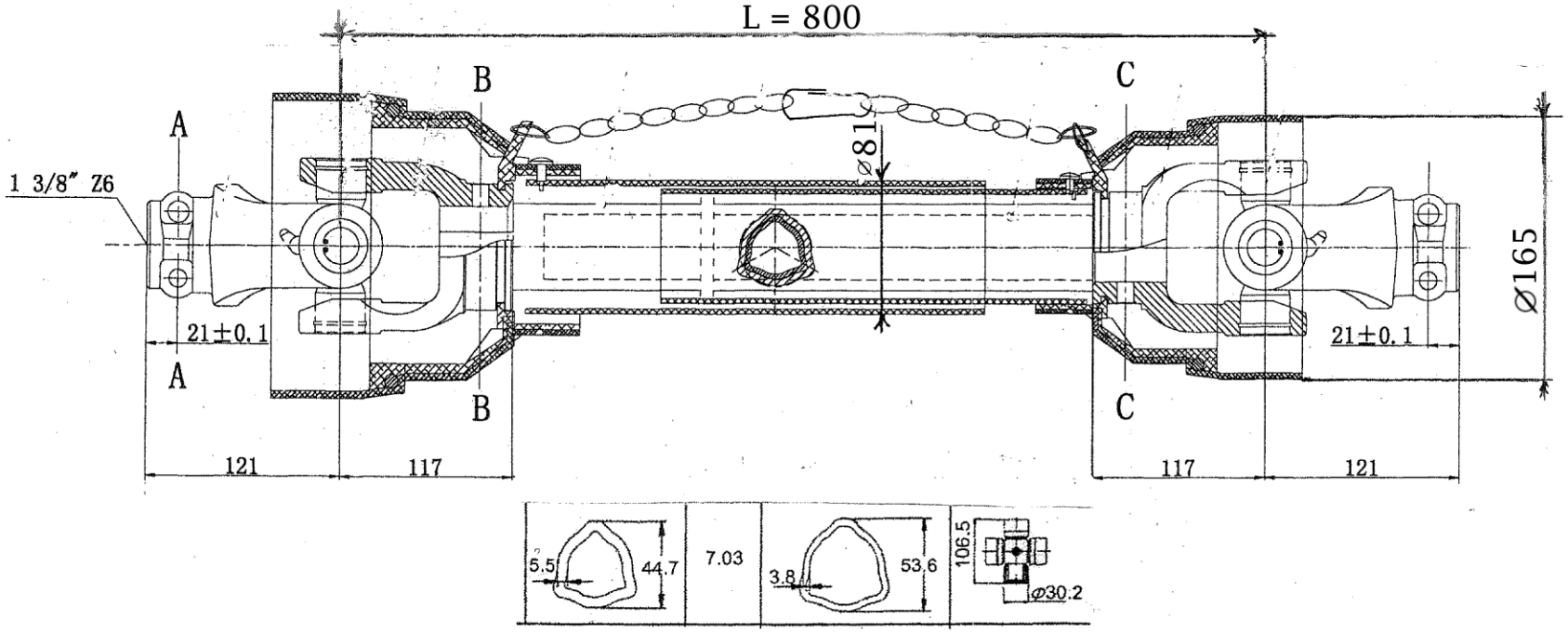

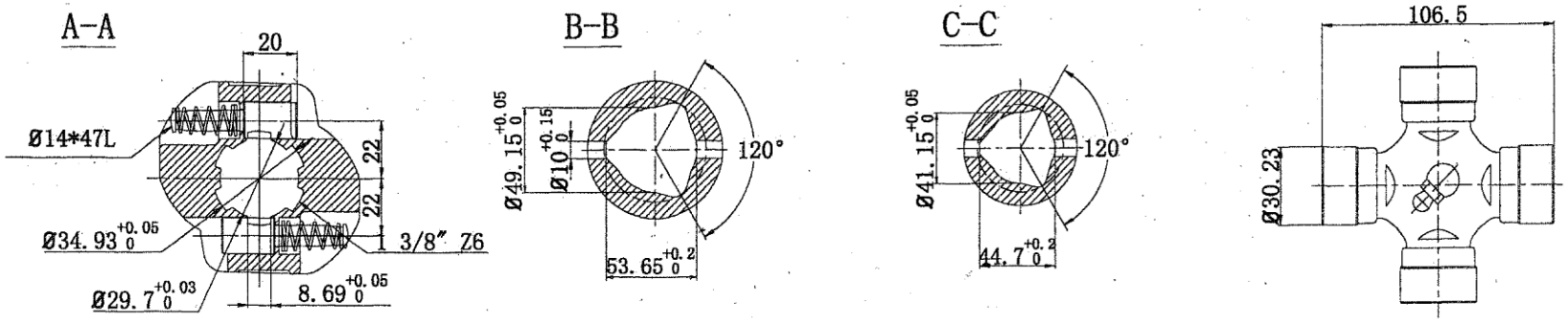

DATI TECNICI - *TECHNICAL DATA* - CARACTERISTIQUES TECHNIQUES

540 giri/min - rpm - tr/min				**1000** giri/min - rpm - tr/min			
POTENZA *POWER* - PUISSANCE		COPPIA - *TORQUE* - COUPLE		POTENZA - *POWER* - PUISSANCE		COPPIA - *TORQUE* - COUPLE	
KW	**CV-HP-PS**	**N•m**	**in•lb**	**KW**	**CV-HP-PS**	**N•m**	**in•lb**
55	75	1000	8850	83	113	810	7170

Valori per angoli di snodo 5° durata 1000 ore.

Values related to 5° joint angles, 1000 hours life

Dimensione T=80 - Size T=80

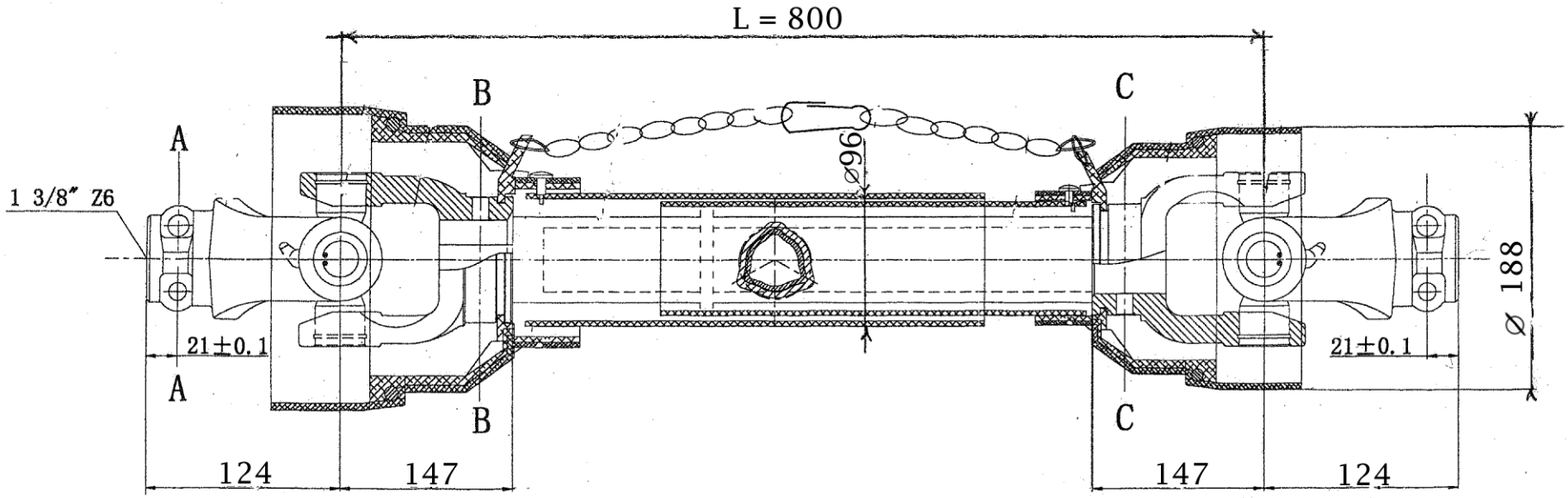

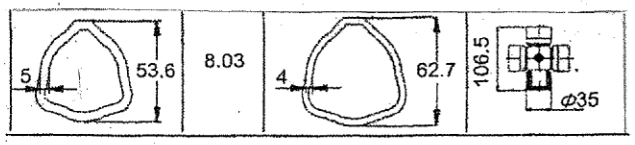

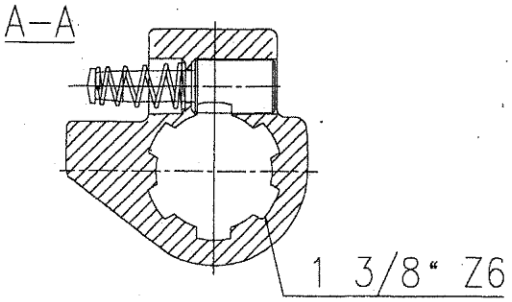

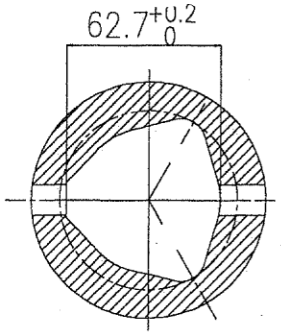

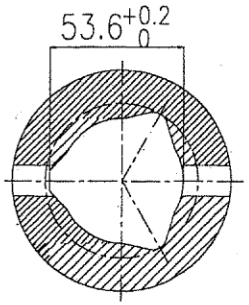

DATI TECNICI - *TECHNICAL DATA* - CARACTERISTIQUES TECHNIQUES

540 giri/min - rpm - tr/min				**1000** giri/min - rpm - tr/min			
POTENZA - *POWER* - PUISSANCE		COPPIA - *TORQUE* - COUPLE		POTENZA - *POWER* - PUISSANCE		COPPIA - *TORQUE* - COUPLE	
KW	**CV-HP-PS**	**N•m**	**in•lb**	**KW**	**CV-HP-PS**	**N•m**	**in•lb**
70	95	1240	10950	110	150	1050	9300

Valori per angoli di snodo 5° durata 1000 ore. *Values related to 5° joint angles, 1000 hours life*

PTO DRIVESHAFT SERIES

SHAFT POWER RATING

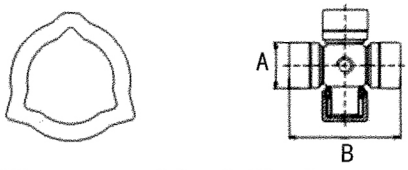

TYPE T

SIZE		A (mm)	B(mm)		540rpm	1000rpm
1	T1	22	54	Cv	16	24
				Kw	12	18
				Nm	210	170
2	T2	23.8	61.3	Cv	27	40
				Kw	20	30
				Nm	280	230
3	T3	27	70	Cv	33	50
				Kw	24	37
				Nm	400	320
4	T4		74.6	Cv	35	53
				Kw	26	39
				Nm	460	360
5	T5	30.2	80	Cv	47	75
				Kw	35	55
				Nm	620	500
6	T6		92	Cv	55	83
				Kw	40	61
				Nm	850	690
7	T7		106.5	Cv	75	106
				Kw	55	78
				Nm	1000	810
7N	T7N	35	94	Cv	70	118
				Kw	51	87
				Nm	970	830
8	T8		106.5	Cv	90	136
				Kw	66	100
				Nm	1250	1020

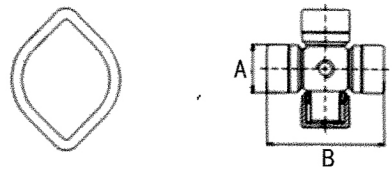

TYPE L

SIZE		A (mm)	B(mm)		540rpm	1000rpm
1	L1	22	54	Cv	16	24
				Kw	12	18
				Nm	210	175
2	L2	23.8	61.3	Cv	27	42
				Kw	20	31
				Nm	355	295
3	L3	27	70	Cv	33	50
				Kw	24	37
				Nm	400	320
4	L4		74.6	Cv	38	60
				Kw	28	44
				Nm	500	415
5	L5	30.2	80	Cv	47	70
				Kw	35	51
				Nm	620	500
32	L32	32	76	Cv	53	83
				Kw	39	61
				Nm	695	580
6	L6	30.2	92	Cv	55	83
				Kw	40	61
				Nm	850	690

PLASTIC SHIELD

SHIELD I

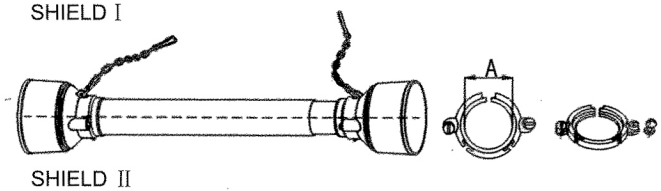

SHIELD II

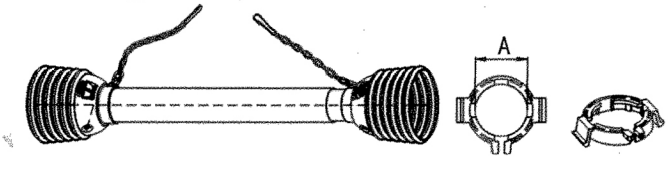

SHIELD III

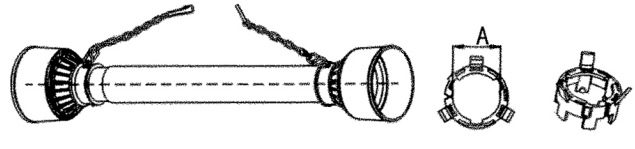

SIZE	SHIELD TUBE DIAMETER		BEARING RING DIMENSION A (mm)	
	OUTER	INNER	OUTER	INNER
1	66.3mm	60.2mm	42mm	35mm
2			47mm	41mm
3 / 4			54mm	47mm
5 / 6 / 7	81mm	75mm	68.5mm	59.5mm
8			70.2mm	64.3mm

PTO DRIVESHAFT SERIES

CROSS JOURNAL

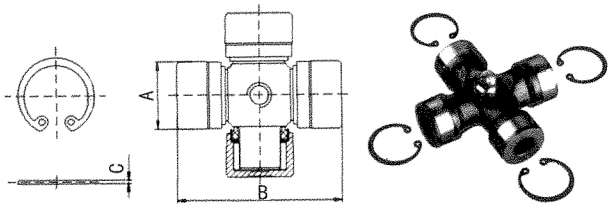

SIZE	REF	A mm	B mm	C mm
20	20.01	20	50	1
1	1.01	22	54	1.2
2	2.01	23.8	61.3	
3	3.01	27	70	
4	4.01	27	74.6	
5	5.01	30.2	80	
32	32.01	32	76	
6	6.01	30.2	92	
7	7.01	30.2	106.5	
7N	7N.01	35	94	1.5
8	8.01	35	106.5	
36	36.01	36	89	

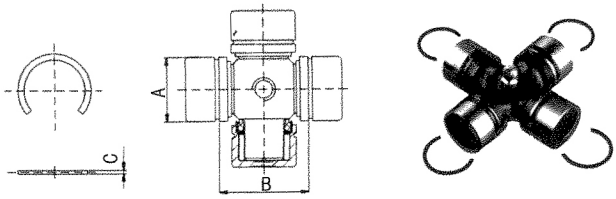

SIZE	REF	A mm	B mm	C mm
JH50	JH50.01	32	57	1.6
38	38.01	38	57	3

TRIANGULAR TUBE/LEMON TUBE/STAR TUBE

INNER		OUTER		REFERING CROSS JOURNAL	
1.04	3.5, 26.6	1.03	2.5, 32.4	54, Φ22	1
2.04	4, 29	2.03	3.4, 36.1	61.3, Φ23.8	2
4.04	4.4, 36.1	4.03	3.3, 43.4	70, Φ27	3
				74.6, Φ27	4
5.04	4, 44.7	5.03	2.9, 51.3	80, Φ30.2	5
6.04	4, 44.7	6.03	3.8, 53.6	92, Φ30.2	6
7.04	5.5, 44.7	7.03	3.8, 53.6	106.5, Φ30.2	7
8.04	5, 53.6	8.03	4, 62.7	106.5, Φ35	8

INNER		OUTER		REFERING CROSS JOURNAL	
1.04L	30.8, 23.7, 3.4	1.03L	39.1, 30, 2.8	54, Φ22	1
4.04L	40.1, 34.5, 4	4.03L	48, 41.2, 2.8	61.3, Φ23.8	2
				70, Φ27	3
				74.6, Φ27	4
6.04L	49, 39.5, 4.5	6.03L	57.5, 48, 3.8	80, Φ30.2	5
				92, Φ30.2	6

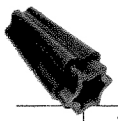

INNER		OUTER	
ST.04	Φ51.4, 47.4, 37.1	ST.03	Φ60.8, 56.8, 4.3, 46.4

PTO DRIVESHAFT SERIES

TENSION PIN/SPLINED YOKE PUSH PIN KIT & TAPER PIN

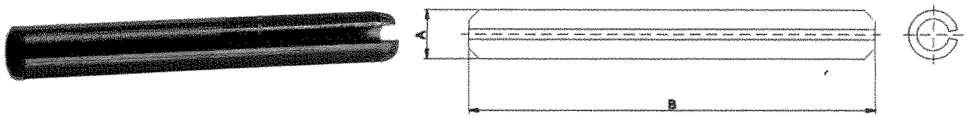

FOR TUBE	Amm	Bmm
1.04	Φ8	40
2.04		50
3.04		60
4.04		55
5.04	Φ10	70
6.04		70
7.04		80
8.04		75

FOR TUBE	Amm	Bmm
1.03	Φ8	50
2.03		55
3.03		60
4.03		60
5.03	Φ10	80
6.03		80
7.03		80
8.03		85

	A mm	REF.
Φ14	47	00.02.01
	44.5	00.02.01*44.5
	59	00.02.01*59
	56	00.02.01*56
Φ14	76.5	00.02.02
	68	00.02.02*68
	73	00.02.02*73
	83	00.02.02*83
Φ16	85	00.02.02*85
	88	00.02.02*88
Φ14	85	00.02.03
Φ14	69	00.02.04
Φ14	43	00.02.05

	A mm	REF.
Φ13	54	00.02.06
Φ14	85	00.02.07
Φ16	85	00.02.08
	77	00.02.08*77
Φ14	91	00.02.09
Φ14	77	00.02.10
	75	00.02.10*75

TRIANGULAR YOKE/LEMON YOKE

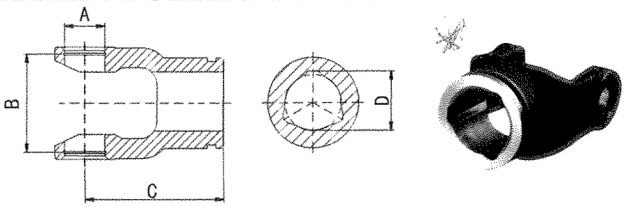

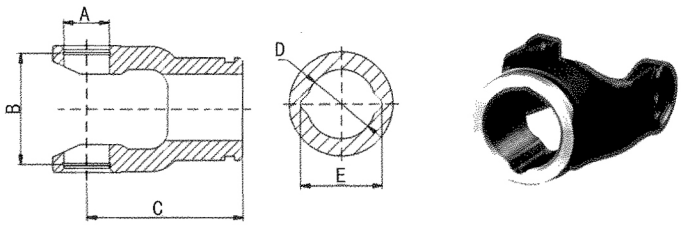

REF	A mm	B mm	C mm	D mm
1.06	22	54	80	32.4
1.07				26.6
2.06	23.8	61.3	84	36.1
2.07				29
3.06	27	70	92	43.4
3.07				36.1
4.06	27	74.6		43.4
4.07				36.1
5.06	30.2	80	98	51.3
5.07				44.7
32.06	32	76		51.3
32.07				44.7
6.06	30.2	92	106	53.6
6.07				44.7
7.06	30.2	106.5	117	53.6
7.07				44.7
7N.06	35	94	106	53.6
7N.07				44.7
8.06	35	106.5	127	62.7
8.07				53.6
38.06	38	57	109	62.7
38.07				53.6

REF	A mm	B mm	C mm	D mm	E mm
1.06L	22	54	80	30	39.1
1.07L				23.7	30.8
2.06L	23.8	61.3	84	41.2	48
2.07L				34.5	40.1
3.06L	27	70	92	41.2	48
3.07L				34.5	40.1
4.06L	27	74.6		41.2	48
4.07L				34.5	40.1
5.06L	30.2	80	98	48	57.5
5.07L				39.5	49
32.06L	32	76		48	57.5
32.07L				39.5	49
6.06L	30.2	92	106	48	57.5
6.07L				39.5	49
7N.06L	35	94		48	57.5
7N.07L				39.5	49

PTO DRIVESHAFT SERIES

SPLINED YOKE PUSH PIN/SPLINED YOKE INTERFERING BOLT

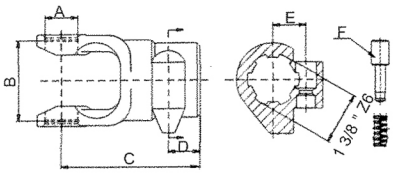

REF	A mm	B mm	C mm	D mm	E mm	F mm
1.05.01B	22	54	93	21	22	00.02.01
2.05.01B	23.8	61.3	99	19		
3.05.01B	27	70	104	21		
4.05.01B	27	74.6	108			
5.05.01B	30.2	80	116	22		
32.05.01B	32	76				
6.05.01B	30.2	92	118	21		

SPLINED YOKE NON-INTERFERING BOLT

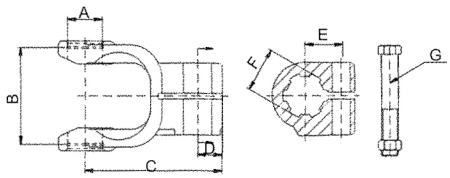

REF	A mm	B mm	C mm	D mm	E mm	F mm	G mm
1.05.03B	22	54	90	20	23.5	1 3/8 " Z6	M10
1.05.03D						1 3/8 " Z21	
2.05.03B	23.8	61.3	99	19		1 3/8 " Z6	
2.05.03D						1 3/8 " Z21	
3.05.03B	27	70	102			1 3/8 " Z6	
3.05.03D						1 3/8 " Z21	
4.05.03B	27	74.6	107			1 3/8 " Z6	
4.05.03D						1 3/8 " Z21	
5.05.03B	30.2	80	109		25	1 3/8 " Z6	M12
5.05.03D						1 3/8 " Z21	
32.05.03B	32	76				1 3/8 " Z6	
32.05.03D						1 3/8 " Z21	
6.05.03B	30.2	92	116			1 3/8 " Z6	
6.05.03D						1 3/8 " Z21	
7.05.03B	30.2	106.5	121			1 3/8 " Z6	
7.05.03D						1 3/8 " Z21	
7N.05.03B	35	94	116			1 3/8 " Z6	
7N.05.03D						1 3/8 " Z21	
8.05.03B	35	106.5	124			1 3/8 " Z6	
8.05.03D						1 3/8 " Z21	
8.05.03C	35	106.5	124		27	1 3/4 " Z6	
8.05.03E						1 3/4 " Z20	

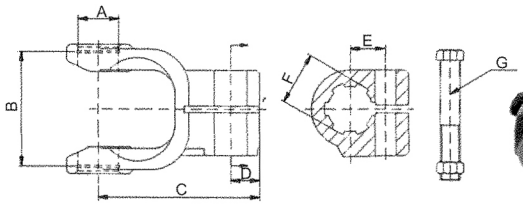

REF	A mm	B mm	C mm	D mm	E mm	F mm	G mm
1.05.02B	22	54	90	20	21	1 3/8 " Z6	M12
1.05.02D						1 3/8 " Z21	
2.05.02B	23.8	61.3	99	19		1 3/8 " Z6	
2.05.02D						1 3/8 " Z21	
3.05.02B	27	70	102			1 3/8 " Z6	
3.05.02D						1 3/8 " Z21	
4.05.02B	27	74.6	107			1 3/8 " Z6	
4.05.02D						1 3/8 " Z21	
5.05.02B	30.2	80	109			1 3/8 " Z6	
5.05.02D						1 3/8 " Z21	
32.05.02B	32	76				1 3/8 " Z6	
32.05.02D						1 3/8 " Z21	
6.05.02B	30.2	92	116			1 3/8 " Z6	
6.05.02D						1 3/8 " Z21	
7.05.02B	30.2	106.5	121			1 3/8 " Z6	
7.05.02D						1 3/8 " Z21	
7N.05.02B	35	94	116			1 3/8 " Z6	
7N.05.02D						1 3/8 " Z21	
8.05.02B	35	106.5	124			1 3/8 " Z6	
8.05.02D						1 3/8 " Z21	
8.05.02C	35	106.5	124		26	1 3/4 " Z6	M14
8.05.02E						1 3/4 " Z20	

SPLINED YOKE WITH BALL ATTACHMENT

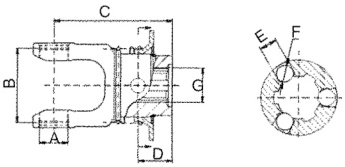

REF	A mm	B mm	C mm	D mm	E mm	F mm	G mm
1.05.04B	22	54	94	26.5	Φ13	SΦ12.7	1 3/8 " Z6
1.05.04D							1 3/8 " Z21
2.05.04B	23.8	61.3	102				1 3/8 " Z6
2.05.04D							1 3/8 " Z21
3.05.04B	27	70	106				1 3/8 " Z6
3.05.04D							1 3/8 " Z21
4.05.04B	27	74.6	108				1 3/8 " Z6
4.05.04D							1 3/8 " Z21
5.05.04B	30.2	80	113				1 3/8 " Z6
5.05.04D							1 3/8 " Z21
32.05.04B	32	76					1 3/8 " Z6
32.05.04D							1 3/8 " Z21
6.05.04B	30.2	92	120				1 3/8 " Z6
6.05.04D							1 3/8 " Z21
7.05.04B		106.5	125				1 3/8 " Z6
7.05.04D							1 3/8 " Z21
8.05.04B	35		128				1 3/8 " Z6
8.05.04D							1 3/8 " Z21

PTO DRIVESHAFT SERIES

SPLINED YOKE PUSH PIN/SPLINED YOKE PUSH PIN

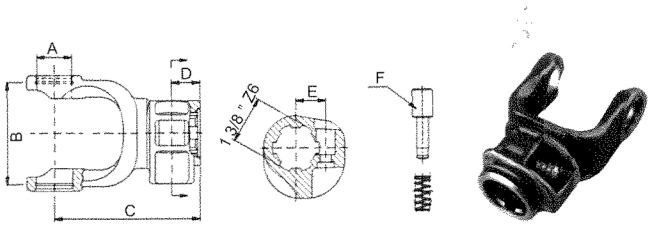

REF	A mm	B mm	C mm	D mm	E mm	F mm
1.05.05B	22	54	93	21	22	00.02.01*44.5
2.05.05B	23.8	61.3	99			
3.05.05B	27	70	104			
4.05.05B		74.6	108			
5.05.05B	30.2	80	111			
32.05.05B	32	76				
6.05.05B	30.2	92	118			
7.05.05B		106.5	124			
7N.05.05B	35	94	116			
8.05.05B		106.5	124			

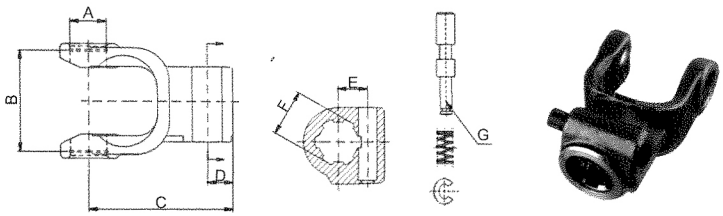

REF	A mm	B mm	C mm	D mm	E mm	F mm	G mm
1.05.07B	22	54	90	20	22	1 3/8 " Z6	00.02.02*68
2.05.07B	23.8	61.3	99	19			00.02.02T1
3.05.07B	27	70	102				
3.05.07D						1 3/8 " Z21	
4.05.07B	27	74.6	107			1 3/8 " Z6	
4.05.07D						1 3/8 " Z21	
5.05.07B	30.2	80	109			1 3/8 " Z6	
5.05.07D						1 3/8 " Z21	
32.05.07B	32	76				1 3/8 " Z6	
32.05.07D						1 3/8 " Z21	
6.05.07B	30.2	92	116			1 3/8 " Z6	
6.05.07D						1 3/8 " Z21	
7.05.07B	30.2	106.5	121			1 3/8 " Z6	
7.05.07D						1 3/8 " Z21	
7N.05.07B	35	94	116			1 3/8 " Z6	
7N.05.07D						1 3/8 " Z21	
8.05.07B	35	106.5	124			1 3/8 " Z6	
8.05.07D						1 3/8 " Z21	
8.05.07C	35	106.5	124			1 3/4 " Z6	
8.05.07E						1 3/4 " Z20	

SPLINED YOKE WITH COLLAR

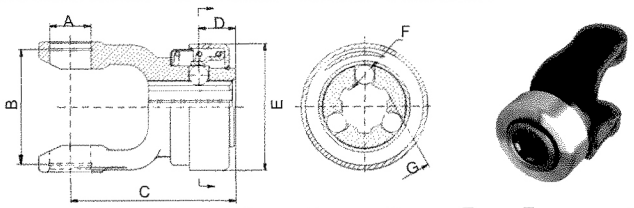

REF	A mm	B mm	C mm	D mm	E mm	F mm	G mm
1.05.13B	22	54	94	24	Φ83	SΦ12.7	1 3/8 " Z6
1.05.13D							1 3/8 " Z21
2.05.13B	23.8	61.3	102				1 3/8 " Z6
2.05.13D							1 3/8 " Z21
3.05.13B	27	70	106				1 3/8 " Z6
3.05.13D							1 3/8 " Z21
4.05.13B	27	74.6	108				1 3/8 " Z6
4.05.13D							1 3/8 " Z21
5.05.13B	30.2	80	113				1 3/8 " Z6
5.05.13D							1 3/8 " Z21
6.05.13B	30.2	92	120				1 3/8 " Z6
6.05.13D							1 3/8 " Z21
7.05.13B	30.2	106.5	125				1 3/8 " Z6
7.05.13D							1 3/8 " Z21
8.05.13B	35		128				1 3/8 " Z6
8.05.13D	35						1 3/8 " Z21

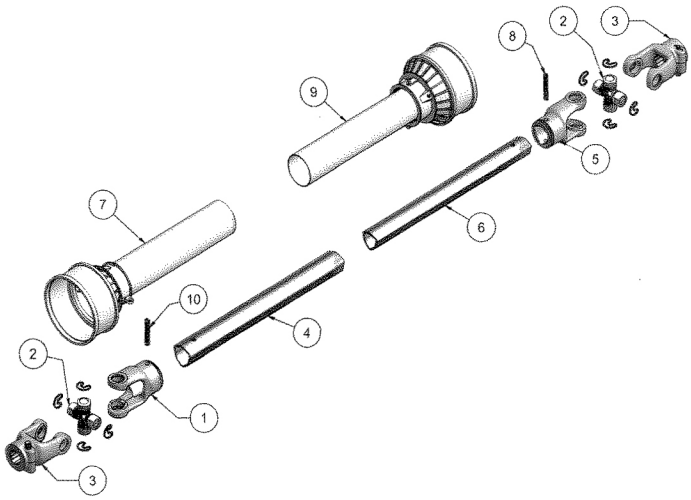

PTO DRIVESHAFT SERIES

PLAIN BORE YOKE PIN HOLE

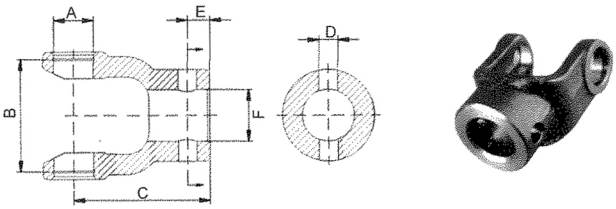

REF	A mm	B mm	C mm	D mm	E mm	F mm
1.05.A20	22	54	80	6	20	20
1.05.A22				8		22
1.05.A25						25
1.05.A30				10		30
1.05.A31.8						31.8
2.05.A20	23.8	61.3	84	6		20
2.05.A22				8		22
2.05.A25						25
2.05.A30				10		30
3.05.A22	27	70	92	8		22
3.05.A25						25
3.05.A30				10		30
3.05.A35				13		35
4.05.A22	27	74.6	92	8		22
4.05.A25						25
4.05.A30				10		30
4.05.A31.8					25	31.8
4.05.A35				13	15	35

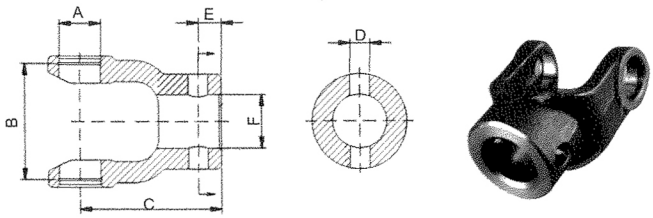

REF	A mm	B mm	C mm	D mm	E mm	F mm
5.05.A30	30.2	80	98	10	20	30
5.05.A35				13		35
5.05.A40						40
32.05.A30	32	76		10		30
32.05.A35				13		35
32.05.A40						40
6.05.A30	30.2	92	106	10		30
6.05.A35				13		35
6.05.A40						40
6.05.A42						42
7.05.A35	30.2	106.5	117		25	35
7.05.A40						40
7.05.A42						42
7.05.A45						45
8.05.A35	35		127			35
8.05.A40						40
8.05.A42						42
8.05.A45						45

PLAIN BORE YOKE KEYWAY

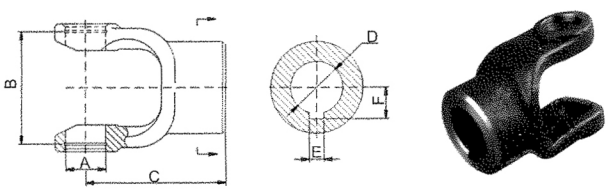

REF	A mm	B mm	C mm	D mm	E mm	F mm
1.05.B20	22	54	80	20	6	12.8
1.05.B22				22		13.8
1.05.B25				25	8	15.8
1.05.B30				30		18.3
2.05.B20	23.8	61.3	84	20	6	12.8
2.05.B22				22		13.8
2.05.B25				25	8	15.8
3.05.B22	27	70	92	22	6	13.8
3.05.B25				25	8	15.8
3.05.B30				30	8	18.3
3.05.B35				35	10	20.8
4.05.B22	27	74.6		22	6	13.8
4.05.B25				25	8	15.8
4.05.B30				30	8	18.3
4.05.B35				35	10	20.8

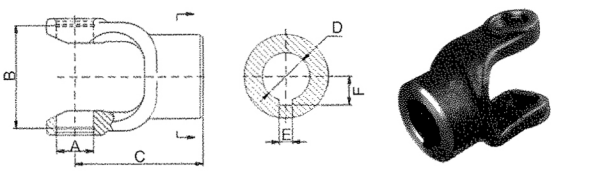

REF	A mm	B mm	C mm	D mm	E mm	F mm
5.05.B30	30.2	80	98	30	8	18.3
5.05.B35				35	10	20.8
5.05.B40				40	12	23.3
32.05.B30	32	76		30	8	18.3
32.05.B35				35	10	20.8
32.05.B40				40	12	23.3
6.05.B30	30.2	92	106	30	8	18.3
6.05.B35				35	10	20.8
6.05.B40				40	12	23.3
6.05.B42				42		24.3
7.05.B35	30.2	106.5	117	35	10	20.8
7.05.B40				40	12	23.3
7.05.B42				42		24.3
7.05.B45				45	14	26.3
8.05.B35	35		127	35	10	20.8
8.05.B40				40	12	23.3
8.05.B42				42		24.3
8.05.B45				45	14	26.3

PTO DRIVESHAFT SERIES

PLAIN BORE YOKE KEYWAY

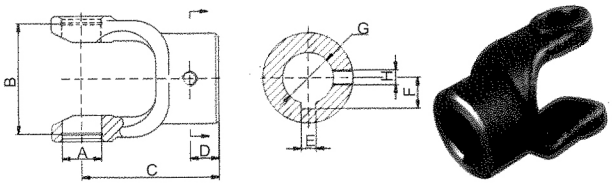

REF	A mm	B mm	C mm	D mm	E mm	F mm	G mm	H mm
1.05.C20	22	54	80	20	6	12.8	20	M6
1.05.C22						13.8	22	
1.05.C25					8	15.8	25	M8
1.05.C30						18.3	30	
2.05.C20	23.8	61.3	84		6	12.8	20	M6
2.05.C22						13.8	22	
2.05.C25					8	15.8	25	M8
2.05.C30						18.3	30	
3.05.C22	27	70	92	15	6	13.8	22	M6
3.05.C25				20	8	15.8	25	M8
3.05.C30						18.3	30	
3.05.C35					10	20.8	35	M10
4.05.C22	27	74.6			6	13.8	22	M6
4.05.C25					8	15.8	25	M8
4.05.C30						18.3	30	
4.05.C35					10	20.8	35	M10

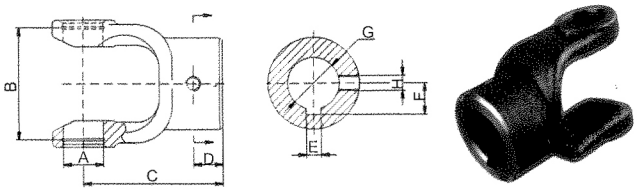

REF	A mm	B mm	C mm	D mm	E mm	F mm	G mm	H mm
5.05.C30	30.2	80	98	20	8	18.3	30	M8
5.05.C35					10	20.8	35	M10
5.05.C40					12	23.3	40	M12
32.05.C30	32	76			8	18.3	30	M8
32.05.C35					10	20.8	35	M10
32.05.C40					12	23.3	40	M12
6.05.C30	30.2	92	106		8	18.3	30	M8
6.05.C35					10	20.8	35	M10
6.05.C40					12	23.3	40	M12
6.05.C42						24.3	42	
7.05.C35	30.2	106.5	117	25	10	20.8	35	M10
7.05.C40					12	23.3	40	M12
7.05.C42						24.3	42	
7.05.C45					14	26.3	45	M14
8.05.C35	35		127		10	20.8	35	M10
8.05.C40					12	23.3	40	M12
8.05.C42						24.3	42	
8.05.C45					14	26.3	45	M14

PLAIN BORE YOKE KEYWAY & CLAMP BOLT

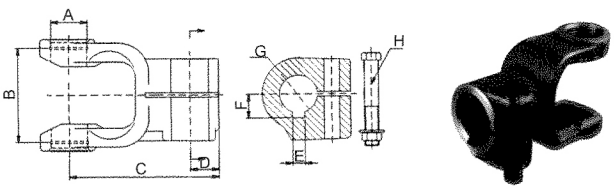

REF	A mm	B mm	C mm	D mm	E mm	F mm	G mm	H mm
1.05.D20	22	54	90	20	6	12.8	20	M10x70
1.05.D30					8	18.3	30	
1.05.D32					10	19.3	32	
2.05.D25	23.8	61.3	99	19	8	15.8	25	
2.05.D30						18.3	30	
2.05.D32					10	19.3	32	
3.05.D25	27	70	102		8	15.8	25	
3.05.D32					10	19.3	32	
3.05.D35						20.8	35	M8x70
4.05.D25	27	74.6	107		8	15.8	25	
4.05.D32						19.3	32	
4.05.D38					10	22.3	38	

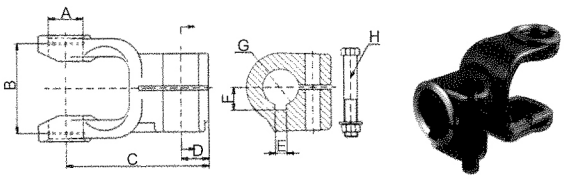

REF	A mm	B mm	C mm	D mm	E mm	F mm	G mm	H mm
5.05.D32	30.2	80	109	19	10	19.3	32	M12x70
5.05.D35						20.8	35	
32.05.D32	32	76				19.3	32	
32.05.D35						20.8	35	
6.05.D30	30.2	92	116		8	18.3	30	
6.05.D32					10	19.3	32	
6.05.D38			126	29		22.3	38	M12x80
6.05.D45					14	26.3	45	
6.05.D50						28.8	50	
7.05.D30	30.2	106.5	121	19	8	18.3	30	M12x70
7.05.D35					10	20.8	35	M10x70
7.05.D40					10	23.3	40	M8x70
8.05.D30	35	106.5	132	29	8	18.3	30	M12x80
8.05.D35					10	20.8	35	
8.05.D40					10	23.3	40	
8.05.D45					14	26.3	45	M12x85

PTO DRIVESHAFT SERIES

PLAIN BORE YOKE VERTICAL PIN HOLE

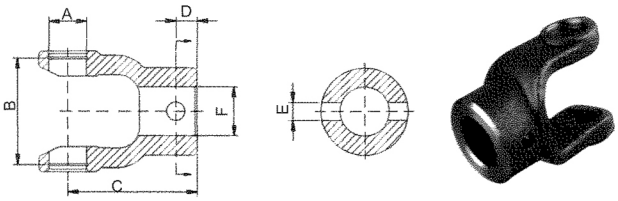

REF	A mm	B mm	C mm	D mm	E mm	F mm
1.05.F20	22	54	80	15	6	20
1.05.F22					8	22
1.05.F25						25
1.05.F30					10	30
1.05.F31.8				18.5		31.8
2.05.F20	23.8	61.3	84	15	6	20
2.05.F22					8	22
2.05.F25						25
2.05.F30					10	30
3.05.F22	27	70	92		8	22
3.05.F25				20		25
3.05.F30					10	30
3.05.F35					13	35
4.05.F22	27	74.6			8	22
4.05.F25						25
4.05.F30					10	30
4.05.F31.8						31.8
4.05.F35					13	35

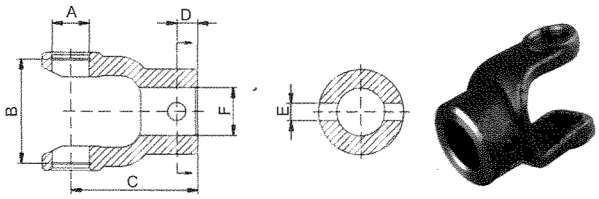

REF	A mm	B mm	C mm	D mm	E mm	F mm
5.05.F30	30.2	80	98	20	10	30
5.05.F35					13	35
5.05.F40						40
32.05.F30	32	76			10	30
32.05.F35					13	35
32.05.F40						40
6.05.F30	30.2	92	106		10	30
6.05.F35					13	35
6.05.F40						40
6.05.F42						42
7.05.F35	30.2	106.5	117	25		35
7.05.F40						40
7.05.F42						42
7.05.F45						45
8.05.F35	35		127			35
8.05.F40						40
8.05.F42						42
8.05.F45						45

PLAIN BORE YOKE PIN HOLE & THREADED HOLE

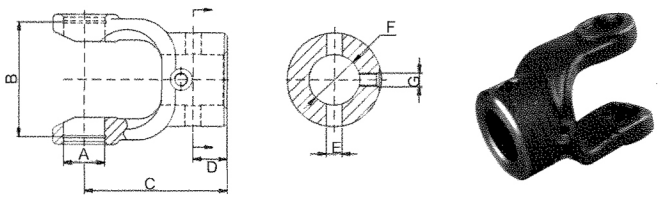

REF	A mm	B mm	C mm	D mm	E mm	F mm	G mm
1.05.H20	22	54	80	15	6	20	M6
1.05.H22					8	22	
1.05.H25						25	
1.05.H30					10	30	
1.05.H31.8				18.5		31.8	
2.05.H20	23.8	61.3	84	15	6	20	
2.05.H22					8	22	
2.05.H25						25	
2.05.H30					10	30	
3.05.H22	27	70	92		8	22	
3.05.H25				20		25	
3.05.H30					10	30	
3.05.H35					13	35	
4.05.H22	27	74.6			8	22	
4.05.H25						25	
4.05.H30					10	30	
4.05.H31.8						31.8	
4.05.H35				15	13	35	M8

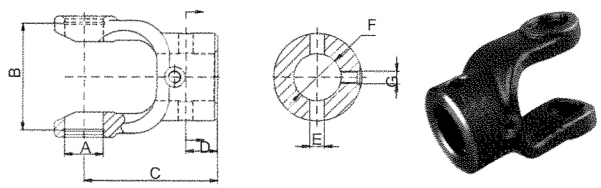

REF	A mm	B mm	C mm	D mm	E mm	F mm	G mm
5.05.H30	30.2	80	98	20	10	30	M6
5.05.H35					13	35	M8
5.05.H40						40	M10
32.05.H30	32	76			10	30	M6
32.05.H35					13	35	M8
32.05.H40						40	M10
6.05.H30	30.2	92	106		10	30	M6
6.05.H35					13	35	M8
6.05.H40						40	M10
6.05.H42						42	
7.05.H35	30.2	106.5	117	25		35	M8
7.05.H40						40	M10
7.05.H42						42	
7.05.H45						45	
8.05.H35	35		127			35	M8
8.05.H40						40	M10
8.05.H42						42	
8.05.H45						45	

PTO DRIVESHAFT SERIES

FRICTION TORQUE LIMITER(TAPER PIN)
FF_1–FF_2 WITH2 FRICTION DISCS/FF_3–FF_4 WITH4 FRICTION DISCS

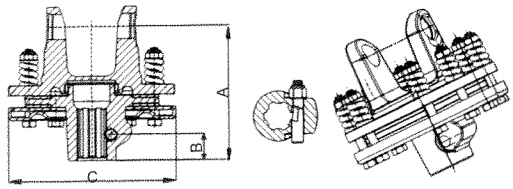

SIZE	REF	Max torque (Nm)	Female disc	Spline (Female)	A mm	B mm	C mm
4	4FF1	900	Φ140	1 3/8 " Z6	155	29	Φ180
	4FF1.D			1 3/8 " Z21			
5	5FF1			1 3/8 " Z6	153		Φ185
	5FF1.D			1 3/8 " Z21			
6	6FF1			1 3/8 " Z6	163		Φ180
	6FF1.D			1 3/8 " Z21			
4	4FF2	1200	Φ160	1 3/8 " Z6	155	29	Φ200
	4FF2.D			1 3/8 " Z21			
5	5FF2			1 3/8 " Z6	154		
	5FF2.D			1 3/8 " Z21			
6	6FF2			1 3/8 " Z6	162		
	6FF2.D			1 3/8 " Z21			
	6FF2.C			1 3/4 " Z6			
	6FF2.E			1 3/4 " Z20			
7	7FF2			1 3/8 " Z6	167		
	7FF2.D			1 3/8 " Z21			
	7FF2.C			1 3/4 " Z6			
	7FF2.E			1 3/4 " Z20			
8	8FF2			1 3/8 " Z6	168		
	8FF2.D			1 3/8 " Z21			
	8FF2.C			1 3/4 " Z6			
	8FF2.E			1 3/4 " Z20			

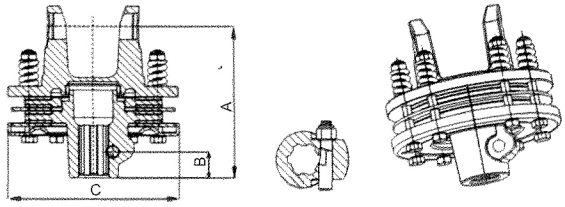

SIZE	REF	Max torque (Nm)	Female disc	Spline (Female)	A mm	B mm	C mm
5	5FF3	1500	Φ140	1 3/8 " Z6	170	29	Φ180
	5FF3.D			1 3/8 " Z21			
6	6FF3			1 3/8 " Z6	178		
	6FF3.D			1 3/8 " Z21			
	6FF3.C			1 3/4 " Z6			
	6FF3.E			1 3/4 " Z20			
6	6FF4	2000	Φ160	1 3/8 " Z6	178	29	Φ200
	6FF4.D			1 3/8 " Z21			
	6FF4.C			1 3/4 " Z6			
	6FF4.E			1 3/4 " Z20			
7	7FF4			1 3/8 " Z6	183		
	7FF4.D			1 3/8 " Z21			
	7FF4.C			1 3/4 " Z6			
	7FF4.E			1 3/4 " Z20			
8	8FF4			1 3/8 " Z6	186		
	8FF4.D			1 3/8 " Z21			
	8FF4.C			1 3/4 " Z6			
	8FF4.E			1 3/4 " Z20			

FRICTION TORQUE LIMITER(CLAMP BOLT)
FF_1–FF_2 WITH2 FRICTION DISCS/FF_3–FF_4 WITH4 FRICTION DISCS

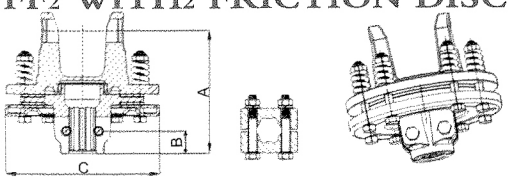

SIZE	REF	Max torque (Nm)	Friction disc	Spline (Female)	A mm	B mm	C mm
4	4FFV1	900	Φ140	1 3/8 " Z6	155	29	Φ180
	4FFV1.D			1 3/8 " Z21			
5	5FFV1			1 3/8 " Z6	153		Φ185
	5FFV1.D			1 3/8 " Z21			
6	6FFV1			1 3/8 " Z6	162		Φ180
	6FFV1.D			1 3/8 " Z21			
4	4FFV2	1200	Φ160	1 3/8 " Z6	154	29	Φ200
	4FFV2.D			1 3/8 " Z21			
5	5FFV2			1 3/8 " Z6	153		
	5FFV2.D			1 3/8 " Z21			
6	6FFV2			1 3/8 " Z6	161		
	6FFV2.D			1 3/8 " Z21			
	6FFV2.C			1 3/4 " Z6			
	6FFV2.E			1 3/4 " Z20			
7	7FFV2			1 3/8 " Z6	166		
	7FFV2.D			1 3/8 " Z21			
	7FFV2.C			1 3/4 " Z6			
	7FFV2.E			1 3/4 " Z20			
8	8FFV2			1 3/8 " Z6	168		
	8FFV2.D			1 3/8 " Z21			
	8FFV2.C			1 3/4 " Z6			
	8FFV2.E			1 3/4 " Z20			

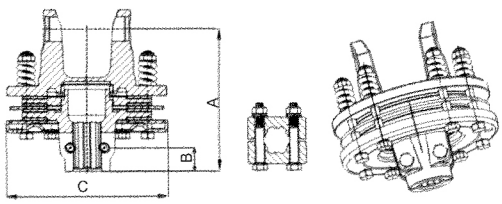

SIZE	REF	Max torque (Nm)	Friction disc	Spline (Female)	A mm	B mm	C mm
5	5FFV3	1500	Φ140	1 3/8 " Z6	170	29	Φ180
	5FFV3.D			1 3/8 " Z21			
6	6FFV3			1 3/8 " Z6	178		
	6FFV3.D			1 3/8 " Z21			
	6FFV3.C			1 3/4 " Z6			
	6FFV3.E			1 3/4 " Z20			
6	6FFV4	2000	Φ160	1 3/8 " Z6	178	29	Φ200
	6FFV4.D			1 3/8 " Z21			
	6FFV4.C			1 3/4 " Z6			
	6FFV4.E			1 3/4 " Z20			
7	7FFV4			1 3/8 " Z6	183		
	7FFV4.D			1 3/8 " Z21			
	7FFV4.C			1 3/4 " Z6			
	7FFV4.E			1 3/4 " Z20			
8	8FFV4			1 3/8 " Z6	186		
	8FFV4.D			1 3/8 " Z21			
	8FFV4.C			1 3/4 " Z6			
	8FFV4.E			1 3/4 " Z20			

PTO DRIVESHAFT SERIES

FREE WHEEL (RA1–RAS1)/FREE WHEEL(RA2–RAS2)

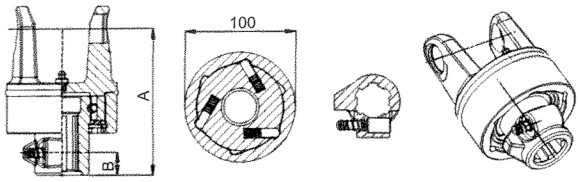

SIZE	REF	Max Torque (Nm)	Spline (Female)	A mm	B mm
1	1RA1	1600	1 3/8 " Z6	125	24
2	2RA1			130	
3	3RA1			132	
4	4RA1			138	
5	5RA1			141	
6	6RA1			148	

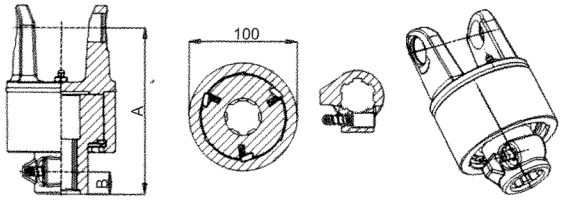

SIZE	REF	Max Torque (Nm)	Spline (Female)	A mm	B mm
5	5RA2	2400	1 3/8 " Z6	160	24
6	6RA2			167	

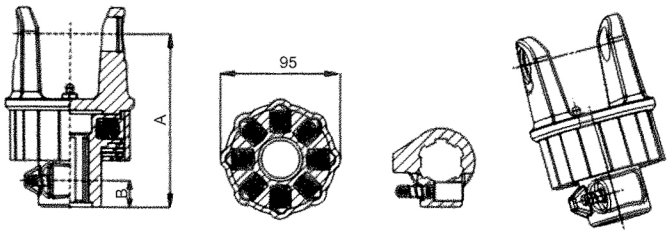

SIZE	REF	Max Torque (Nm)	Spline (Female)	A mm	B mm
1	1SA1	300	1 3/8 " Z6	125	24
2	2SA1			130	
3	3SA1			132	

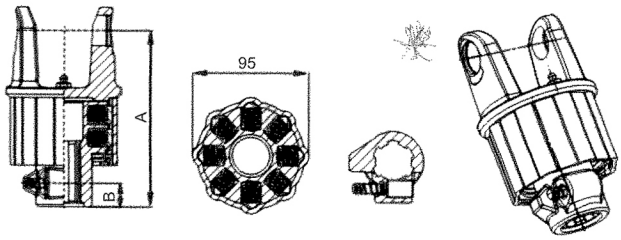

SIZE	REF		Spline (Female)	A mm	B mm
1	1SA2	600	1 3/8 " Z6	144	24
2	2SA2			149	
3	3SA2			152	
4	4SA2			157	
5	5SA2			161	

WIDE ANGLE JOINT/SHEAR BOLT TORQUE LIMITER(SB)

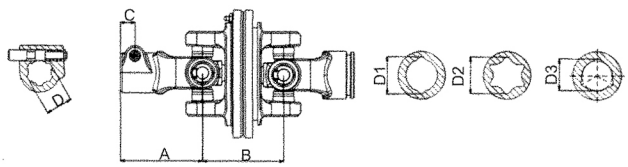

WIDE ANGLE JOINT CODE:32WA.00

A	B	C	D_1	D_2	D_3
109mm	105mm	19mm	49mm	47.4mm	44.7mm

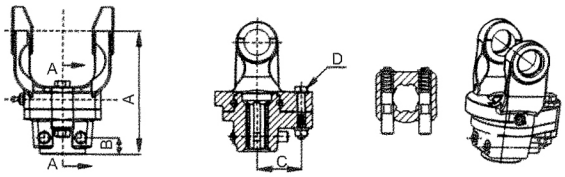

7	7SB	2500	1 3/8 " Z6	143	22	45	M10x60
	7SBT1	3000				49	M12x60
8	8SB	3000		148	20	60	M10x60
	8SBT1	3500				57	M12x60
	8SB.C	3500	1 3/4 " Z6			60	M10x60
	8SBT1.C	3500				57	M12x60
38	38SB	3500	1 3/8 " Z6	147	20	60	M10x60

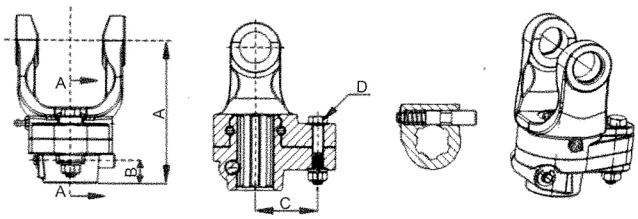

SIZE	REF	Torque Nm	Spline (Female)	A mm	B mm	C mm	D REF
1	1SB	650	1 3/8 " Z6	95	19	45	M6x40
	1SBT1	650				35	
2	2SB	900		99		45	
	2SBT1	950				48	
3	3SB	1280		102		38	M8x45
	3SBT1	1300				40	
4	4SB	1480		107		48	
	4SBT1	1700				55	
5	5SB	1800		111	21		M8x50
	5SBT1	2100				46	M10x50
6	6SB	2100		137	22	60	M8x55
	6SBT1	2500				55	M10x55

Bevel gear can be manufactured on customer's drawing

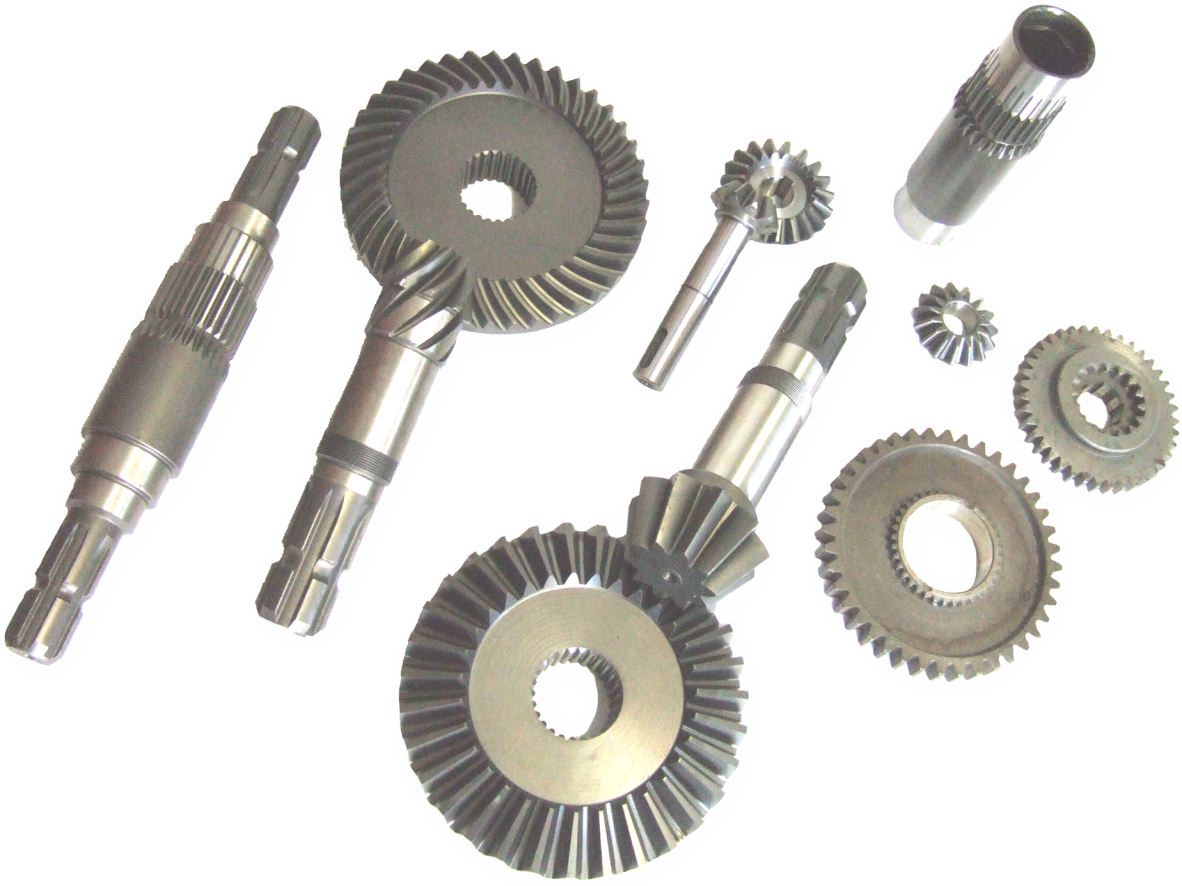

Operating torque							
Type	540 tr./min			1000 tr./min			Nm
	kw	pk	Nm	kw	pk	Nm	
T10	12	16	210	18	25	172	320
T20	15	21	270	23	31	220	450
T30	22	30	390	35	47	330	640
T40	26	35	460	40	55	380	780
T50	35	47	620	54	74	520	1050
T60	47	64	830	74	100	710	1450
T70	55	75	970	87	118	830	1800
T7N	55	75	970	87	118	830	1800
T80	70	95	1240	110	150	1050	2250
T90	88	120	1560	140	190	1340	2900

NOTE:

FERRONI TRASMISSION S.r.l.

Manufactures - Gearboxes

Via Prato Bovino, 86 Cogruzzo
42024 CASTELNOVO SOTTO (RE) ITALY

Tel. 0522/685339 http://www.ferronitransmission.it
Fax 0522/685298 e-mail: info@ferronitransmission.it

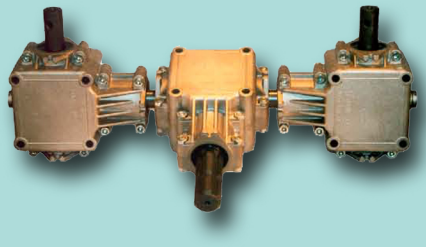

RV 010-010-010

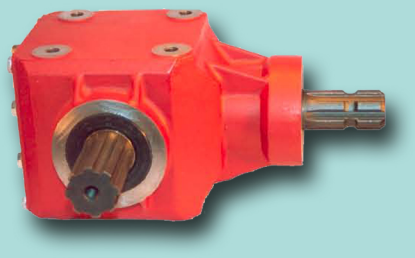

RV 80 - HP 110

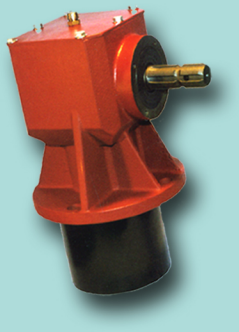

VT 035 L
HP 40

VT 050 C
HP 60

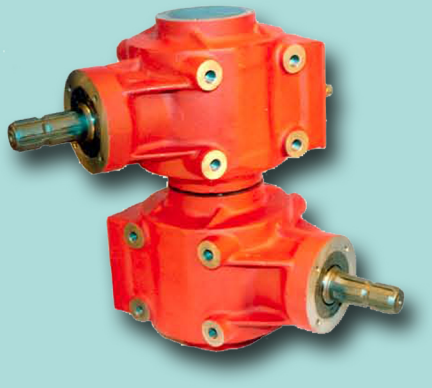

RV 11 C2 - HP 60

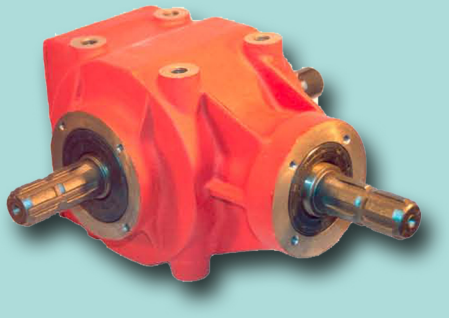

RV 011 S

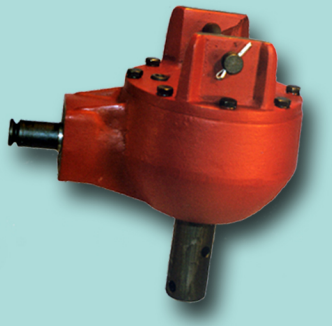

RVT 8000 - HP 60

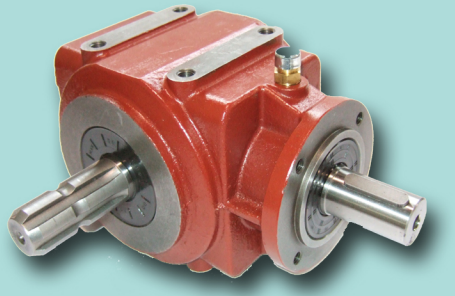

FT 410 FREE - WHEEL
RATIO 1:3 - HP 30

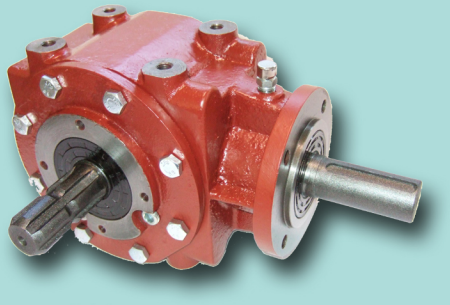

FT 411 FREE - WHEEL
RATIO 1:1.6 - HP 78

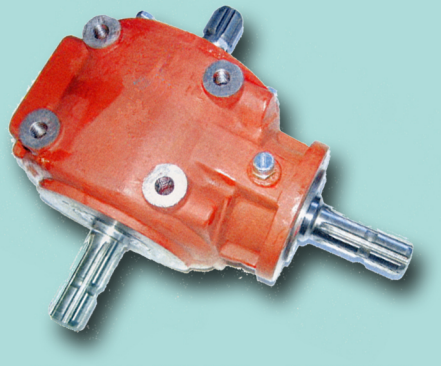

FT 413 FREE - WHEEL
RATIO 1:1.6 - HP 104

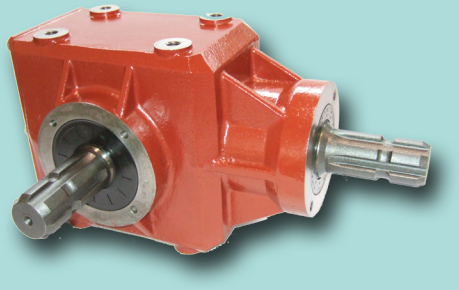

RV 90
RATIO 1.93:1 - HP 50

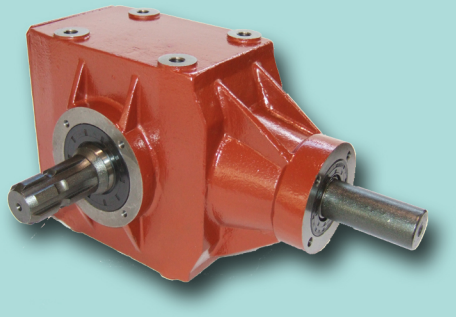

RV 101
RATIO 1.93:1 - HP 90

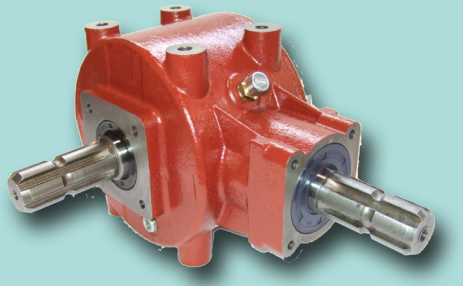

FT 404
RATIO 3:1 - HP 28

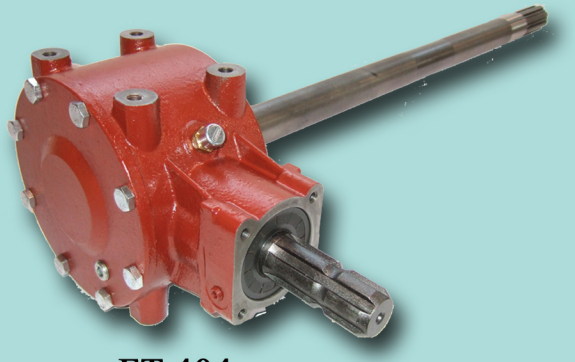

FT 404
RATIO 1.93:1 - HP 38

Il nostro programma di produzione
comprende potenze da 10 Hp a 150 Hp.
Visitate il nostro sito www.ferronitransmission.it
oppure richiedete il nostro catalogo generale
al numero 0522.685339 o fax 0522.685298.

Our program includes production of
power from 10 Hp to 150 Hp.
Visit our website or ask for our general catalog
a number 0522.685339 or fax 0522.685298.